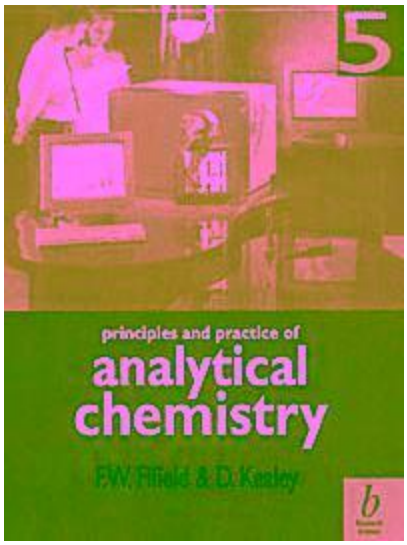
5
principles and practice of
analytical
chemistry
F.W. Fifield & D. Kealey
b

Principles and Practice of Analytical Chemistry

Fifth Edition

F.W. Fifield

Kingston University

and
D. Kealey

University of Surrey

4.3.2—
High Performance Liquid Chromatography

Summary

Principles

Separation of mixtures in microgram to gram quantities by passage of the sample through a column containing a stationary solid by means of a pressurized flow of a liquid mobile phase; components migrate through the column at different rates due to different relative affinities for the stationary and mobile phases base on adsorption, size or charge.

Apparatus and Instrumentation

Solvent delivery system; stainless steel columns; injection port; flow-through detector, recorder.

Applications

Used largely for the separation of non-volatile substances including ionic and polymeric samples; complementary to gas chromatography.

Disadvantages

Column performance very sensitive to settling of the packed bed or the accumulation of strongly adsorbed materials or particulate matter at the top; universal detection system not available.

High performance liquid chromatography (HPLC) has its origins in classical column chromatography although in both theory and practice it is similar to gas chromatography. In column chromatography the sample is introduced into a liquid mobile phase which flows through a column of relatively coarse particles of the stationary phase, usually silica or alumina, under the influence of gravity. Flow rates are of the order of 0.1 $cm^3\ min^{-1}$ which results in extremely lengthy separation times and quite inadequate efficiencies and separations of multicomponent mixtures. The poor

performance is largely due to very slow mass transfer between stationary and mobile phases and poor packing characteristics leading to a large multiple path effect (p. 89). It was recognized that much higher efficiencies and hence better resolution could be achieved through the use of smaller particles of stationary phase, and that rapid separations would require higher flow rates necessitating the pumping of the mobile phase through the column under pressure. The means of meeting these two basic requirements were developed during the 1960s together with suitable pumps, injection systems and low dead-volume detectors and the new technique, which is now at least as extensively used as GC, became known as '*high performance' liquid chromatography* (HPLC) or simply '*liquid chromatography*' (LC). The mobile phase is typically pumped at pressures up to about 3000 psi (200 bar), and flow rates of 1–5 $cm^3\ min^{-1}$ can be achieved through 10–25 cm columns packed with particles as small as 3 μm in diameter. At its best, HPLC is comparable to GC for speed, efficiency and resolution and it is inherently more versatile. It is not limited to volatile and thermally stable samples and the choice of stationary phase includes solid adsorbents, chemically modified adsorbents, ion-exchange and exclusion materials thus allowing all four sorption mechanisms (p. 80) to be exploited. A much wider choice of mobile phases than in GC facilitates a very considerable variation in the selectivity of the separation process.

A schematic diagram of a high performance liquid chromatograph is shown in Figure 4.30 and details of the components are discussed below. All materials which come into contact with the mobile phase are manufactured from stainless steel, PTFE, sapphire, ruby or glass for inertness.

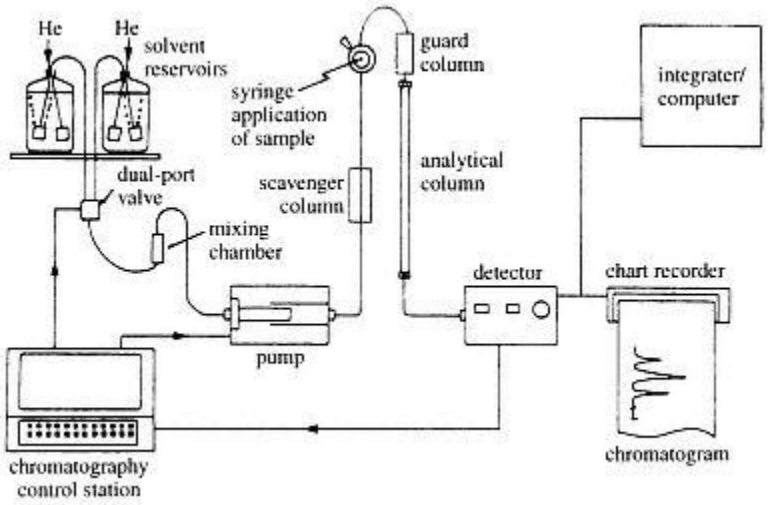

Figure 4.30
Schematic diagram of a binary (2-solvent) HPLC system.

(1)—
Solvent Delivery Systems

These include solvent reservoirs and inlet filters, solvent degassing facilities and one or more pumps with associated pressure and flow controls. Most systems are microprocessor or computer controlled enabling parameters to be selected and monitored during operation using simple keypad dialogues. The ability to store sets of parameters as method files and to run diagnostic tests of the system are also often available. A single solvent may be used as the mobile phase for *isocratic* elution or mixtures of two to four solvents (*binary*, *ternary* and *quaternary*) blended together under microprocessor or computer control for *gradient* elution, i.e. where the composition of the mobile phase is altered during the chromatographic run so as to optimize the separation. Pumps for HPLC should be capable of delivering a constant, reproducible and pulse-free supply of mobile phase to the column at flowrates between 0.1 and at least 5 $cm^3\ min^{-1}$ and at operating pressures up to about 3000 psi (200 bar). They should be chemically inert to the various solvents that may be used and preferably have a very small hold-up volume to facilitate rapid changes of mobile phase and for gradient elution. A number of types of pump have been developed and these can be classified according to whether they function at *constant flow*, which is desirable for reproducible retention data, or *constant pressure*. The latter will deliver a constant flow only if column backpressure, solvent viscosity and temperature also remain constant.

Constant flow reciprocating pumps are now the most widely used type (Figure 4.31(a)), but because their mechanical action inherently produces a pulsating delivery of the mobile phase the flow must be smoothed so as to eliminate the pulsations. This can be achieved in several ways, the simplest being the incorporation of a *pulse damper* in the flow to the column. One such device is a flexible bellows or diaphragm enclosed in a small oil-filled chamber which absorbs the pulsations. Alternative designs of pump include a double-headed arrangement where two pistons operate in parallel but with delivery strokes 180° out-of-phase and sharing common solvent inlets and outlets. Another is an in-line double-headed pump with one piston (A) having twice the capacity of the other and delivering solvent both to the column and to the chamber of the second piston simultaneously (Figure 4.31(b)). The smaller piston (B) then takes over the delivery whilst the larger one is refilling.

With both designs, residual pulsations can be virtually eliminated with a pulse damper or by suitable cam design that varies the speed of the pistons during the fill and delivery parts of the cycle so as to maintain a constant flow. The flow rates of reciprocating pumps are varied by altering the length of stroke of the piston(s) or through the use of a variable speed steppermotor. Constant flow can be ensured by incorporating flow or pressure sensors into the design which automatically adjust pumping stroke or motor speed by means of a feed-back system. Automatic compensation for solvent compressibility can therefore be achieved.

Two alternative but much less common types of constant flow pump are

the screw-driven syringe and the hydraulic amplifier. The former consists of a variable-speed stepper motor which drives a plunger into a stainless-steel cylinder of large capacity (up to 500 cm^3) while in the latter a variable speed gear pump supplies oil under pressure to a pressure intensifier which in turn acts upon the mobile phase contained in a cylinder and delivers it to the column at a greatly increased pressure. Disadvantages of these types of pump are cost and the need for frequent refilling especially when solvents need to be changed, although both achieve constant and pulseless flows without the need for pulse-dampers or feed-back controls.

Where binary, ternary or quaternary gradient elution (p. 91) is required, a microprocessor controlled low-pressure gradient former is the most suitable (Figure 4.31(c)). The solvents from separate reservoirs are fed to a mixing chamber via a multiport valve, the operation of which is preprogrammed via the microprocessor, and the mixed solvent is then pumped to the column. For the best reproducibility of solvent gradients small volume pumps (< 100 µl) are essential.

(2)—
Sample Injection System

Sample injection in HPLC is a more critical operation than in GC. Samples may be injected either by *syringe* or with a *valve injector* although the former is now rarely used. Valves, which can be used at pressures up to about 7000 psi (500 bar), give very reproducible results for replicate injections (< 0.2% relative precision) and are therefore ideal for quantitative work (p. 134). They consist of a stainless steel body and rotating central block into which are cut grooves to channel the mobile phase from the pump to the column (Figure 4.32). The sample is loaded into a stainless steel loop incorporated into the valve body or attached externally whilst the mobile phase is passed directly to the column. By rotating the central block, the flow can be diverted through the loop thereby flushing the sample onto the column. Returning the block to its original position enables the next sample to be loaded ready for injection. Although the sample injected is generally a fixed volume as determined by the size of the loop, these are interchangeable and range from 2 µl to over 100 µl. *Multiport valves* which can accommodate several loops of different sizes are available, and some loops can be used partially filled. Automated injection systems that allow a series of samples and standards to be injected over a period of time whilst the instrument is unattended and under variable chromatographic conditions are frequently used in industrial laboratories.

(3)—
The Column

Columns are made from straight lengths of precision-bore stainless-steel tubing with a smooth internal finish. Typically they are 10–25 cm long and 4–5 mm i.d. Microbore columns, 20–50 cm long and with an i.d. of 1–2 mm, are sometimes used where sample size is limited and to minimize solvent consumption because the volumetric flow rate through them is less than a

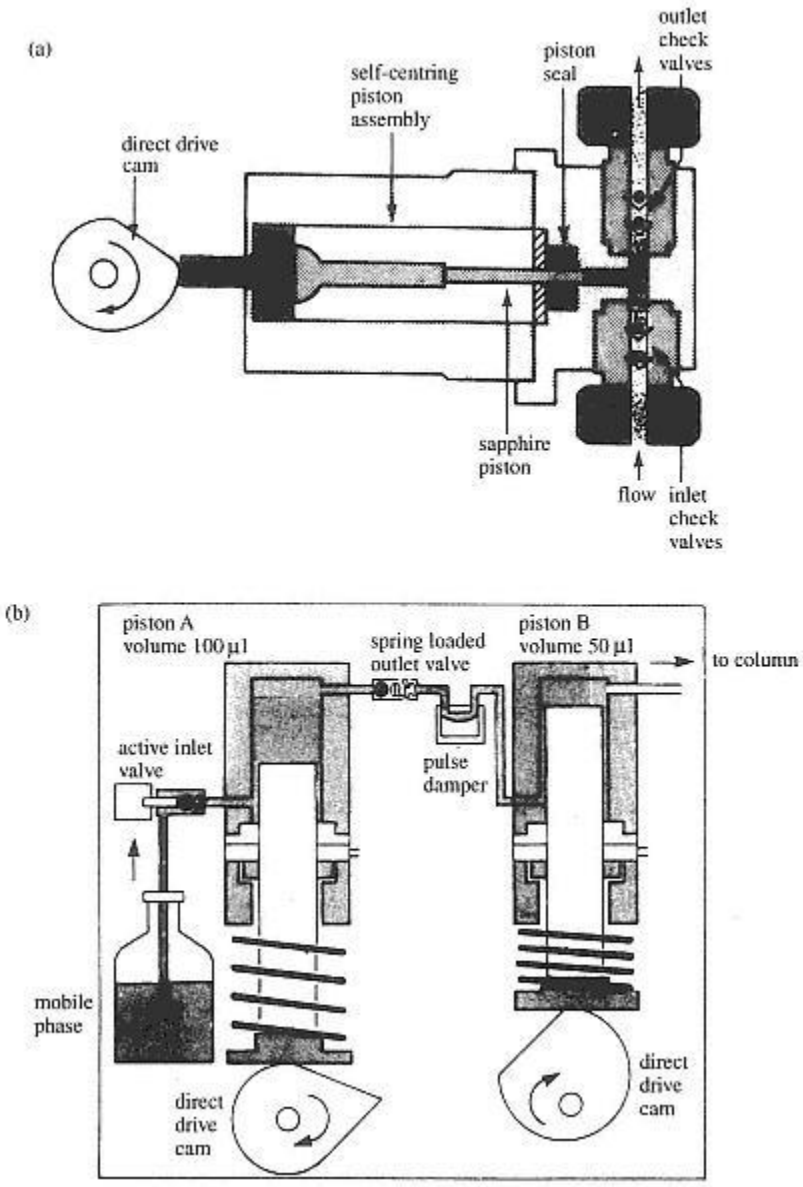

Figure 4.31
(a) Single-head reciprocating pump
(reproduced by permission of Gilson Medical Electronics. Inc.).
(b) Double-head 'in-series' reciprocating pump.

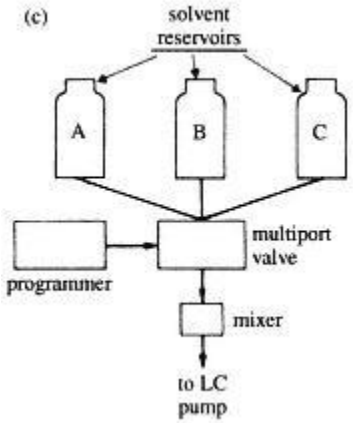

Figure 4.31
(c) A low-pressure gradient former with three solvents.

quarter of that through conventional columns. The stationary phase or packing is retained at each end by thin stainless-steel frits or mesh disks of 2 µm porosity or less. Columns are packed by a *slurry method* which involves suspending the particles of packing in a suitable solvent and 'slamming' it into the column rapidly and at pressures in excess of 3 000 psi (200 bar). The choice of slurry solvent depends upon the nature of the packing and many solvents have been investigated. *Balanced-density* slurries, in which solvent density is matched with particle density, are sometimes used to minimize settling out of larger particles during the packing procedure or for packings which are larger than 10 µm.

HPLC columns need more careful handling and storage than GC columns to avoid disturbance of the packed bed. They should be kept sealed at both ends when not in use and flushed with methanol prior to sealing.

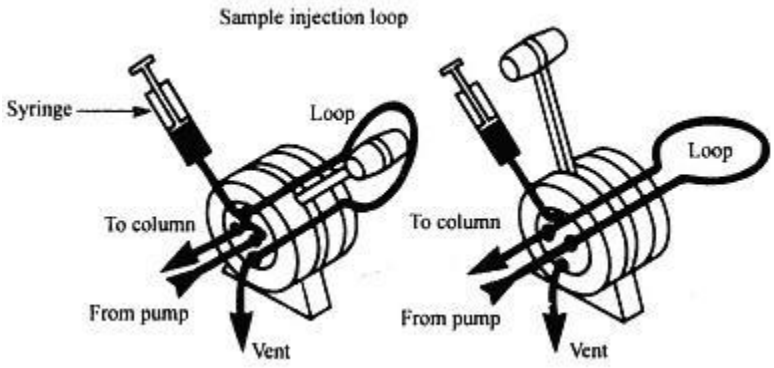

Figure 4.32
Valve injector with external loop.

Column life is generally six months or more and can be prolonged by use of a *guard column* and a *scavenger column* . The former consists of a very short length of column placed between the injection port and the analytical column to trap strongly retained species or particulate matter originating in the mobile phase, the samples or from wearing of the injection valve. It is packed with relatively large particles (~30 µm) of the same or a similar stationary phase to that used in the analytical column and require periodic renewal. Scavenger columns are short lengths of tube packed with large particle silica and positioned between the pump and the injection valve with the principal object of saturating an aqueous mobile phase with silica to reduce attack on the packing in the analytical column, especially by high or low pH buffers.

(4)—
Stationary Phase (Column Packing)

Unmodified or chemically modified microparticulate silicas (3, 5 or 10 µm) are preferred for nearly all HPLC applications. The particles, which are totally porous, may be spherical or irregular in shape but it is essential that the size range is as narrow as possible to ensure high column efficiency and permeability. For separations based on adsorption, an unmodified silica, which has a polar surface due to the presence of silanol (Si–OH) groups, is used. Appropriate chemical modification of the surface by treatment with chloro- or alkoxy-silanes, e.g. $R(CH_3)_2SiCl$, produces *bonded-phase* packings which are resistant to hydrolysis by virtue of forming siloxane (Si—O—Si —C) bonds. The reactions are similar to those used to silanize GC supports (p. 97). Materials with different polarities and chromatographic characteristics can be prepared. The most extensively used are those with a non-polar hydrocarbon-like surface, the modifying groups, R, being octadecyl (C_{18} or ODS), octyl or aryl. More polar bonded-phases, e.g. amino-propyl, cyanopropyl (nitrile) and diol, and cation and anion exchange materials are also available. Mixed ODS/aminopropyl and ODS/nitrile phases having enhanced selectivity for certain classes of compound have also been produced. Ion-exchange chromatography is discussed more fully in section 4.3.5. HPLC separations based on exclusion (GPC) are best achieved with microparticulate silicas which are sometimes chemically modified with such groups as trimethylsilyl to eliminate or minimize adsorption effects. Exclusion separations using polymeric gels are discussed in section 4.3.6.

Chiral stationary phases for the separation of *enantiomers* (optically active isomers) are becoming increasingly important. Among the first types to be synthesized were chiral amino acids ionically or covalently bound to amino-propyl silica and named *Pirkle* phases after their originator. The ionic form is susceptable to hydrolysis and can be used only in normal phase HPLC whereas the more stable covalent type can be used in reverse phase separations but is less stereoselective. Polymeric phases based on chiral peptides such as bovine serum albumin or α_1 -acid glycoproteins bonded to

silica, esterified cellulose and chiral cyclodextrins can all be used in reverse phase separations. The latter, α-, β- or γ-cyclodextrins form barrel-shaped cavities into which enantiomers can fit. Chiral phases form complexes with analytes by binding them at specific sites through H-bonding, π–π and dipolar interactions. In addition, steric repulsion, solvent, pH, ionic strength and temperature all affect chromatographic retention. If the total adsorption energy of two enantiomers differs then a separation is possible.

The recently introduced graphitized carbon and a new generation of rigid porous polymeric micro-beads based on styrene/divinyl benzene as alternatives to silica, can both be used over an extended pH range between 1 and 13. These materials have increased the choice of stationary phases and the scope of HPLC, particularly for highly polar and basic substances where peak tailing on silica-based columns is a frequent occurrence. Some examples of column packings used in HPLC and their applications are given in Table 4.13.

(5)—
Mobile Phase

Unlike GC, in HPLC appropriate selection of the mobile phase composition is crucial in optimizing chromatographic performance. The eluting power of the mobile phase is determined by its overall polarity, the polarity of the stationary phase and the nature of the sample components. For 'normal phase' separations (polar stationary phase/non-polar mobile phase) eluting power *increases* with increasing solvent polarity whereas for 'reverse phase' separations (non-polar stationary phase/polar mobile phase) eluting power *decreases* with increasing solvent polarity. Some examples of solvents suitable for HPLC are given in Table 4.9 together with their polarities as measured by a solubility parameter, *P*' (applicable to partition-based separations) and an adsorption parameter, ε^0 (applicable to adsorption-based separations). Such a list is often called an *eluotropic series*. Other properties of solvents which must be taken into account include boiling point and viscosity, detector compatibility, flammability and toxicity. Generally, lower boiling and hence less viscous solvents give higher chromatographic efficiencies and lower back pressures. The most commonly used detectors are based on absorbance of UV radiation and on refractive index (see below). The UV cut-off and refractive indices of solvents therefore need to be known. These are included in Table 4.9.

Often, optimum retention and resolution are achieved by using a mixture of two solvents. The solubility-based parameter, *P*', varies linearly with the proportion of the two solvents, being given by the weighted arithmetic mean of the two individual values. The adsorption-based parameter, ε_0, however, increases rapidly with small additions of a more polar solvent to a less polar one and levels off as the proportion increases. Elution with a single solvent or mixed solvent of fixed composition is called *isocratic* as opposed to *gradient* elution (p. 91). Gradient elution is sometimes employed where sample components vary widely in polarity. Gradient

Table 4.13 Some column packings used in HPLC

Packing	Mode of HPLC*	Applications
microparticulate silicas; spherical or irregular particles; mean particle size 3 µm, 5 µm, 10 µm	LSC (adsorption)	non-polar to moderately polar mixtures, e.g. polyaromatics, fats, oils, mixtures of isomers
chemically modified versions of the above (bonded-phase packings) :		
octadecyl (ODS or C_{18})	BPC, IPC	wide range of moderately polar mixtures, e.g. pharmaceuticals and drugs, amino acids
octyl (C_8)	BPC, IPC	more polar mixtures, e.g. pesticides, herbicides, peptides, metabolites in body fluids
short chain (C_3 or less)	BPC, IPC	IPC applications of above three packings include bases, dyestuffs and other multiply charged species; can be used instead of IEC
diol	BPC	very polar and water-soluble compounds, e.g. food and drink additives
nitrile	normal phase and BPC	alternative to silica and can give better
aminoakyl	BPC	results carbohydrates including sugars
anion and cation exchangers (tertiary amine or sulphonic acid)	IEC	ionic and ionizable compounds, e.g. vitamins, water-soluble drugs, amino acids, food and drink additives
controlled porosity silicas (may be chemically modified to reduce adsorption effects)	SEC	polymer mixtures, screening of unknown samples. Increasing use for separating mixtures of smaller molecules before other modes of HPLC
chiral amino acids bound to aminopropyl	CC	mixtures of enantiomers especially of drugs
chiral peptides	CC	
cyclodextrins	CC	

* LSC = liquid–solid chromatography
BPC = bonded -phase chromatography
IPC = ion-pair chromatography
ICE = ion-exchange chromatgraphy
SEC = size exclusion chromatography
CC = chiral chromatography

formers (p. 121) enable binary, ternary and quaternary mixtures of solvents to be blended reproducibly. In reverse phase separations the most widely used mobile phases are mixtures of aqueous buffers with methanol, or water with acetonitrile. In normal phase work pentane or hexane with dichloromethane, chloroform or an alcohol are frequently used.

Many solvents for HPLC require purification before use as the impurities may either be strongly UV absorbing, e.g. aromatic or alkene impurities in *n*-alkanes, or they may be of much higher polarity than the solvent itself, e.g. traces of water or acids, or ethanol in chloroform, etc. All mobile phases should be filtered and degassed before pumping through the column, the former to prevent contamination and clogging of the top of the column and the latter to prevent noise in the detector from the formation of air bubbles due to the pressure dropping to atmospheric at the column exit.

(6)—
Detectors

The ideal HPLC detector should have the same characteristics as those required for GC detectors, i.e. rapid and reproducible response to solutes, a wide range of linear response, high sensitivity and stability of operation. No truly universal HPLC detector has yet been developed but the two most widely applicable types are those based on the absorption of UV or visible radiation by the solute species and those which monitor refractive index differences between solutes dissolved in the mobile phase and the pure mobile phase. Other detectors which are more selective in their response rely on such solute properties as fluorescence, electrical conductivity, diffusion currents (amperometric) and radioactivity. The characteristics of the various types of detector are summarized in Table 4.14.

UV/Visible Photometers and Dispersive Spectrophotometers

These detectors respond to UV/visible absorbing species in the range 190–800 nm and their response is linear with concentration, obeying the Beer-Lambert law (p. 357). They are not appreciably flow or temperature sensitive, have a wide linear range and good but variable sensitivity.

Photometers are designed to operate at one or more fixed wavelengths only, e.g. 220, 254, 436 and 546 nm, whereas *spectrophotometers* facilitate monitoring at any wavelength within the operating range of the instrument. Both types of detector employ low-volume (10 µl or less) flow-through cells fitted with quartz windows. Careful design of the cell, which should be of minimal volume to reduce band-spreading, and maximal path length for high sensitivity, is necessary to reduce undesirable refraction effects at the cell walls as solutes pass through.

Although many substances absorb appreciably at 254 nm or one of the other fixed wavelengths available with a photometer, a much more versatile detection system is based on a spectrophotometer fitted with a grating monochromater and continuum source, e.g. a deuterium lamp for the UV region and a tungsten-halogen lamp for the visible region (Figure 4.33). They have double-beam optics (p. 277), stable low-noise electronics and are often microprocessor controlled. Some can be programmed to select a sequence of optimum monitoring wavelengths during or between chromatographic runs, and the recording of a complete UV spectrum after stopping the flow with a selected peak in the detector cell is a feature of

Table 4.14 Characteristics of liquid chromatography detectors*

Detector basis	Type**	Maximum sensitivity***	Flow rate sensitive?	Temperature sensitivity	Useful with gradient?
Ultraviolet absorption	*S*	5×10^{-10}	No	Low	Yes
Infrared absorption	*S*	10^{-6}	No	Low	Yes
Fluorimetry	*S*	10^{-10}	No	Low	Yes
Refractive index	*G*	5×10^{-7}	No	$\pm 10^{-4}$°C	No
Conductometric	*S*	10^{-8}	Yes	± 1°C	No
Mass spectrometry	*S*	10^{-10}	No	None	—
Amperometric	*S*	10^{-10}	Yes	± 1°C	—
Radioactivity	*S*	—	No	None	Yes

* Most of these data were taken from: L. R. Snyder and J. J. Kirkland, *Introduction to Modern Liquid Chromatography*. New York: Wiley -Interscience, 1964, p. 165. With permission.

** *G* = general; *S* = selective.

*** Sensitivity for a favourable sample in grams per millilitre.

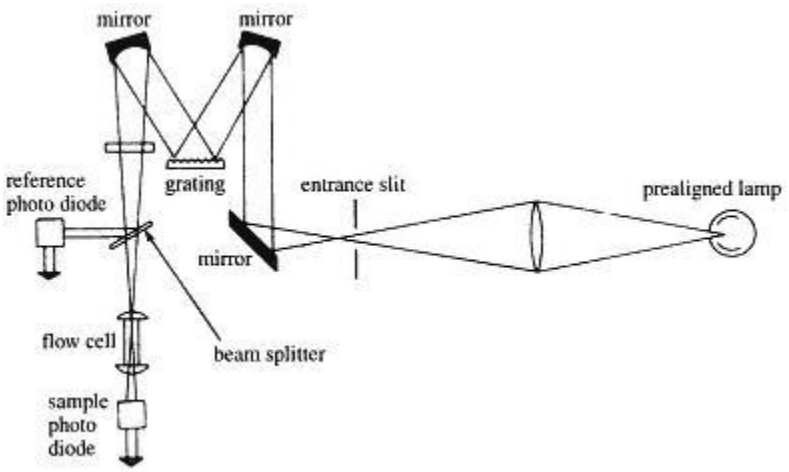

Figure 4.33
Variable-wavelength detector, showing deuterium lamp, optical path, reference photodiode and monochromator.

other designs. Another development is a rapid scanning capability that allows a complete spectrum to be recorded in a fraction of a second without the need to stop the flow, therefore rivalling diode array detectors (*vide infra*). Like the latter, full computer control and high resolution colour graphics enable chromatograms to be displayed in 3D and other formats and peak purity assessed. Sensitivity and resolution are better than some diode array detectors.

Photometers are more sensitive than spectrophotometers, are cheaper and more robust and are well suited to routine work where monitoring at 254 nm or some other fixed wavelength is acceptable. Spectrophotometers, however, allow 'tuning' to the most favourable wavelength either to maximize sensitivity for a particular solute or to 'detune' the response to other solutes. By allowing monitoring down to 190 nm, weakly absorbing or saturated compounds can be detected.

Diode Array Spectrophotometers

These can provide more spectral information than photometers or conventional dispersive spectrophotometers but are much more expensive and generally less sensitive (Figure 4.34(a) and p. 355).

However, they enable sets of complete UV or UV and visible spectra of all the sample components to be recorded as they elute from the column. The stored spectral information can be processed in several ways by the microcomputer and displayed using sophisticated colour graphics software packages. The most usual is a 3D chromatogram of time/absorbance/wavelength as shown in Figure 4.34(b). This can be rotated on the screen to allow examination of otherwise hidden regions behind major peaks, (Figure

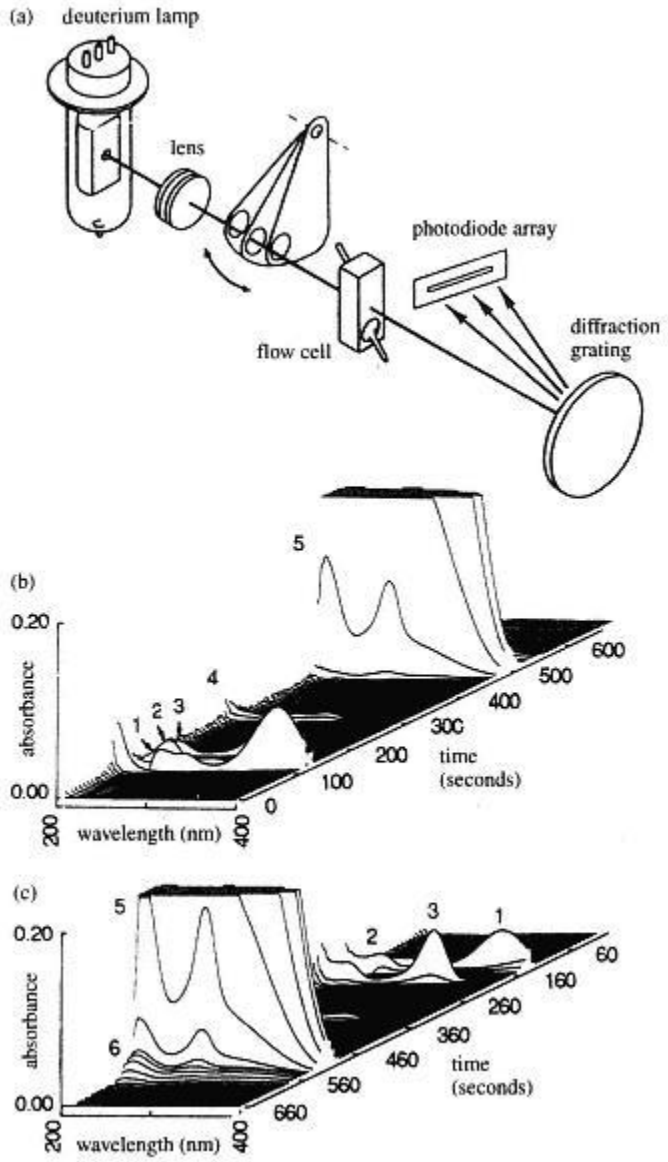

Figure 4.34

(a) Optical path in a UV photodiode array detector. (b and c) Three-dimensional display from UV diode array detector; azathioprine and impurities separated by reversed-phase (RP) HPLC with HP 1040A detector coupled to an HP 85 microcomputer: (b) isometric projection of data showing components 1 –5; (c) reversed projection of data showing components 1–3, 5 and 6. *Key*: (1) 1-methyl-4-nitro -5-hydroxyimidazole; (2) 1 -methyl -4-nitro-5-thioimidazole; (3) 6-mercaptopurine; (4) 1 -methyl-4-nitro-5-chloroimidazole; (5) azathioprine; (6) process impurity.

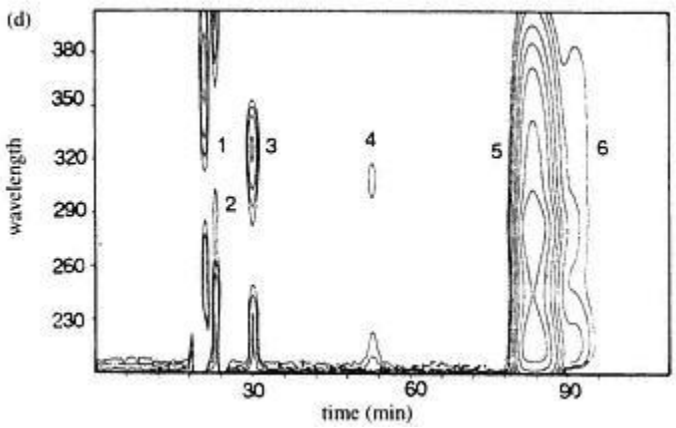

Figure 4.34
(d) Contour plot of data for azathioprine and impurities in (b) and (c), showing the isoabsorbance contours (from 1000 to 5 m AU) plotted in the wave -length-time plane. Key to the peaks, as in (b) and (c).

4.34(c)) or viewed from directly above and shown as an absorbance contour map to provide useful information on peak purity (Figure 4.34(d)). The comparison of spectra selected from any points on the time axis by overlaying them in various colours is an alternative assessment of peak purity and spectra can be matched with a library of standards for identification purposes. Some software packages also include the facility for calculating peak purity factors from absorbance ratios at two or more wavelengths for different time slices of an eluting peak, values close to unity indicating a high degree of purity.

Fluorescence Detectors

These are highly selective and among the most sensitive of detectors. They are based on filter fluorimeters or spectrofluorimeters (p. 377) but are usually purpose-designed for HPLC or capillary electrophoresis (p. 174). The optical arrangement of a typical detector using filters is shown in Figure 4.35. Excitation and emission wavelengths are selected by narrow bandpass filters, and the flow cell has a capacity of 10–25 µl. The optical paths of the excitation and fluorescent emission beams are at 90° to each other. This provides an extremely low background signal whilst only mobile phase is flowing through the cell. Sensitivity can be improved further by focusing the fluorescence onto the photomultiplier tube with a curved parabolic mirror. Analytes that do not fluoresce naturally can be derivatized with commercially available fluorescent reagents prior to chromatography or between the column and the detector (pre- or post-column derivatization). Fluorescence detectors are relatively insensitive both to pulsations in the mobile phase flow and to temperature fluctuations.

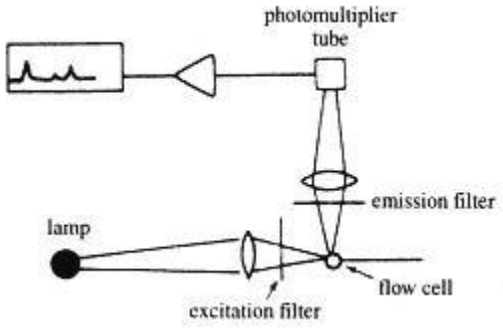

Figure 4.35
Schematic diagram of a simple dual -filter fluorimeter. Excitation using a xenon lamp. Filters used to select the wavelength in both the excitation and emission beams.

Refractive Index (RI) Monitors

There are several types of RI detector, all of which monitor the difference between a reference stream of mobile phase and the column effluent. Any solute whose presence alters the refractive index of the pure solvent will be detected, but sensitivity is directly proportional to the difference between the refractive index of the solute and that of the solvent. At best they are two orders of magnitude less sensitive than UV/visible detectors. All RI detectors are highly temperature-sensitive, and some designs incorporate heat exchangers between column and detector to optimize performance. They cannot be used for gradient elution because of the difficulty in matching the refractive indices of reference and sample streams.

The most common type of RI monitor is the *deflection refractometer* (Figure 4.36). A visible light source is directed through a two -compartment cell divided by a diagonal piece of glass. The light is refracted on the way through the cell, reflected back from a mirror behind the cell then refracted again before being focused on a phototube detector. Whilst only solvent passes through each half of the cell, the phototube signal is constant, but

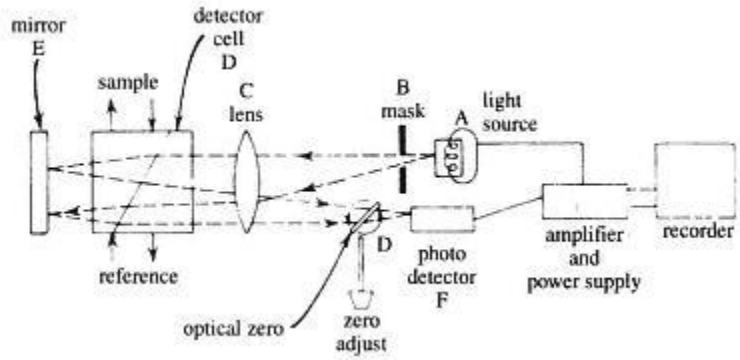

Figure 4.36
Refractive index (RI) detector.

when a solute passes through the sample compartment, the light beam is deflected and the change in intensity of radiation falling on the phototube is registered by the recorder. This type of detector has a wide linear range of response but (like other RI monitors) only moderate sensitivity.

Two other types of RI monitor are based on Fresnel's laws of reflection and the principle of interferometry respectively. The former utilizes a very small volume (3 µl) sample cell and is therefore useful for highly efficient columns, but linearity is limited and the cell windows need to be kept scrupulously clean for optimum performance. The main advantages of the interferometric design are improved sensitivity and a wide linear range.

Electrochemical Detectors

Conductance monitors can be used where the sample components are ionic and providing that the conductivity of the mobile phase is very low. They are used extensively in *ion chromatography* (p. 147) for the detection of inorganic anions, some inorganic cations and ionized organic acids.

Amperometric detectors, which are based on the principle of polarography, rely on measuring the current generated in an electrochemical cell at a fixed applied potential by the facile oxidation or reduction of an eluted compound at the surface of a glassy carbon, gold or platinum micro-electrode. The cell is completed with a calomel reference electrode (p. 231) and an auxiliary electrode, the purpose of the latter being to enable the applied potential to be stabilized when the cell resistance alters by virtue of the currents generated. The mobile phase acts as a supporting electrolyte for the redox reactions and its composition is therefore restricted to predominantly aqueous solvent mixtures. Several designs have been produced, some with internal cell volumes as little as 1 µl; one type is shown in Figure 4.37. Amperometric detectors are amongst the most sensitive available but they are susceptible to noise, caused by any residual pulsations from the pump affecting the flow of mobile phase, and to surface contaminations of the micro-electrode due to the build-up of electrode reaction products which impairs reproducibility. However, their high sensitivity and selectivity (through variation of the applied potential) enhances their value for the trace analysis of certain types of compound, e.g. phenols and arylamines such as catecholamines (by oxidation) and nitro or azo compounds (by reduction) although in the latter cases air must be purged from the mobile phase with nitrogen to eliminate interference by the reduction of dissolved oxygen.

Of the remaining types of detector, those based on fluorimetry are both selective and particularly useful for trace analysis as they can be orders of magnitude more sensitive than UV/visible photometers.

Qualitative and Quantitative Analysis

Methods similar to those used in GC are applicable to HPLC. Thus, comparison of retention data is the most useful means of qualitative identification, the retention factor, *k*, generally being used in preference to

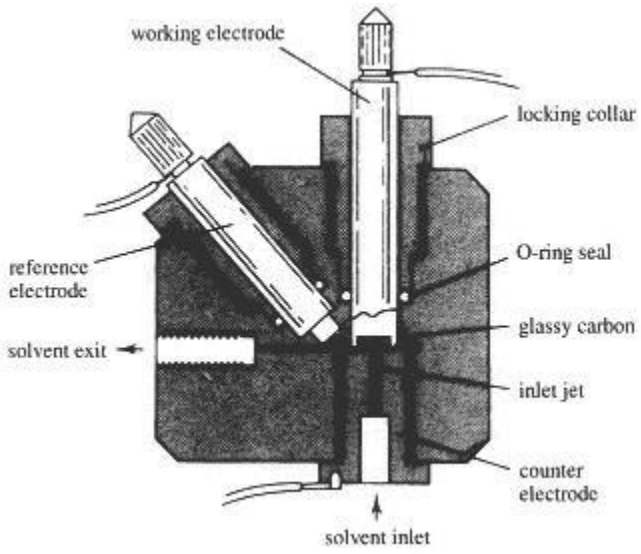

Figure 4.37
'Wall -jet' amperometric detector.

retention time, t_R, (p. 85) – compare gas chromatography (p. 109). As in GC, members of a homologous series show a linear relation between log t_R and the number of carbon atoms. The trapping of HPLC peaks for examination by other techniques such as infrared, nuclear magnetic resonance and mass spectrometry is straightforward, providing that the time taken for the peak to reach a sample vial via a transfer line from the detector can be accurately measured. However, direct interfacing is now the preferred technique. Complete UV/visible spectra are recorded by diode array detectors or the flow can be stopped with the peak in the cell of a conventional dispersive spectrophotometric detector while the complete spectrum is scanned.

Quantitative analysis using valve injection, has a relative precision of 0.2% or better. Precision is highest where 50–200 µl sample loops are used. Isocratic elution is preferable to gradient elution because conditions are more reproducible. Internal standards are not always required, the concentration of samples being determined from previously prepared calibration curves or by using a factor if the curve is linear. For routine analyses, automatic sampling systems are better because they eliminate operator error. Either peak height or peak area can be measured, the former being suitable for sharp, early-eluting peaks, where peaks are not fully resolved, and for trace analysis. Peak area measurements give better precision and are more reliable if peaks are asymmetrical; they are less susceptible to changes in chromatographic conditions.

HPLC-mass Spectrometry

Direct interfacing of HPLC with mass spectrometry is a 'coupled' or 'hyphenated' technique similar to GC-mass spectrometry (p. 114) which provides structural information on separated sample components. Its development has been slow because of difficulties inherent in removing the liquid mobile phase whilst allowing only the analytes to pass into the mass spectrometer, particularly as reverse phase HPLC often employs mobile phases containing aqueous buffers and inorganic salts. Several designs of interface have been developed, the main differences between them being the means of separating analytes from the mobile phase and the method of ionization employed.

With the *thermospray* interface (Figure 4.38(a)), the mobile phase, usually containing an ammonium ethanoate buffer, is passed through a heated probe (350–400°C) into an evacuated source chamber where it forms a supersonically expanding mist of electrically charged droplets. The liquid evaporates to leave charged solid particles which then release molecular ions such as MH^+ and MNH_4^+ by an ammonia chemical ionization (CI) process. The analyte ions are 'skimmed off' into the mass spectrometer whilst the vaporized solvent is pumped away. An electron beam is also employed to enhance the production of ions by CI.

A *particle-beam* interface (Figure 4.38(b)) employs helium to nebulize the mobile phase, producing an aerosol from which the sample is evaporated at near ambient temperature and pressure. The mixture of helium, solvent vapour and analyte molecules is accelerated into a low-pressure two-stage 'momentum separator' where it expands supersonically. The helium and solvent are pumped away whilst the relatively heavy analyte molecules, having much greater momentum, pass straight through two skimmer plates and along a narrow probe into a heated ionization chamber where electron impact (EI) ionization occurs. The *thermospray* and *particle beam* interfaces have now been largely superseded by systems operating at atmospheric pressure.

An *atmospheric pressure chemical ionization* (APCI) interface uses nitrogen as a nebulizing gas and a heated nebulizer probe. The gas and mobile phase droplets are heated to about 120°C in a *desolvation chamber* where a *corona discharge* generates electrons that ionize the mobile phase molecules to give reactant ions (Figure 4.38(c)). These then collide with analyte molecules to yield pseudomolecular ions $(M+H)^+$ or $(M–H)^–$ by chemical ionization (CI, p. 427). The ionization process is very efficient due to the high collision frequency occurring at atmospheric pressure, and rapid desolvation/vaporization minimizes thermal degradation of the analyte molecules. The analyte ions are accelerated through *skimmer-cones* into the spectrometer whilst the uncharged solvent molecules are removed by differential pumping. APCI interfaces can cope with mobile phase flow rates of up to about 2 $cm^3\ min^{-1}$, and as little as 50–100 pg of an analyte can be detected.

An *electrospray* (ES) interface, which also operates at atmospheric

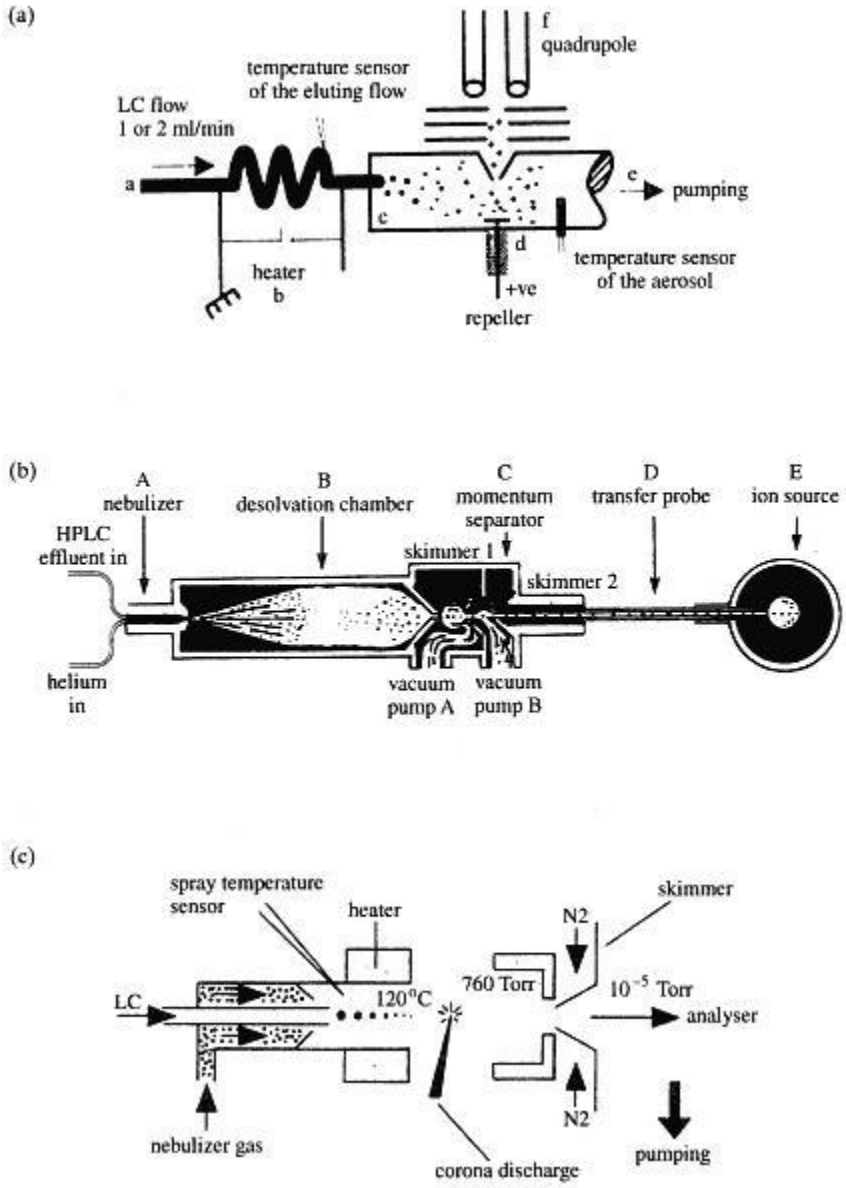

Figure 4.38
(a) Diagram of a thermospray (Finnigan MAT). The chromatographic effluent comes in at a, the transfer line is suddenly heated at b and the spray is formed under vacuum at c. At d the spray goes between a pusher with a positive potential and a negative cone for positive ions. The ions are thus extracted from the spray droplets and accelerated towards the spectrometer f. At e, a high-capacity pump maintains the vacuum.
(b) Particle -beam interface in HPLC-MS.
(c) Diagram of an APCI source.

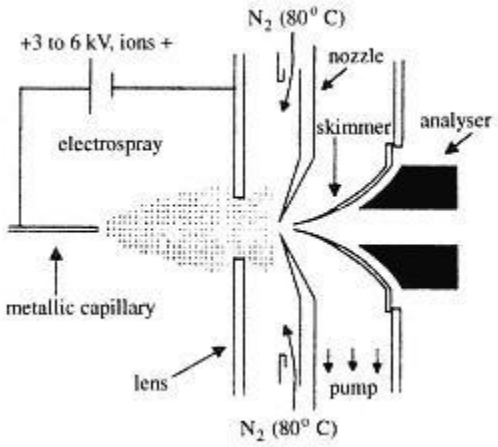

Figure 4.38
(d) Diagram of an electrospray source.

pressure, consists of a metal capillary tube through which column effluent is passed at a relatively low flow rate of 1–20 µl min^{-1}.

An electric field is generated at the capillary exit by applying a 3–6 kV potential between the tube and a counter electrode placed a short distance away (Figure 4.38(d)). The field induces an accumulation of charge on the surface of the liquid emerging from the capillary resulting in the production of highly charged droplets. The droplets shrink as solvent evaporates from their surface, which increases the charge density and leads to their explosive rupture and the creation of smaller charged droplets. This process is repeated many times over to produce a *spray* of ever smaller droplets, and eventually forming multiply-charged analyte species. These are passed through skimmers into the mass spectrometer whilst uncharged solvent molecules are pumped away. The characteristics of the spray, including its stability, are affected by the nature and flow rate of the mobile phase and the magnitude of the applied potential. A practical upper limit of around 20 µl min^{-1} limits the use of an ES interface to microbore columns or conventional columns fitted with an outlet stream-splitter. A variant, known as *ionspray*, involves pneumatic nebulization to increase the flow rate and an earthed screen to inhibit droplet condensation that would otherwise destabilize the spray. Flow rates of up to 2 cm^3 min^{-1} allow the use of conventional columns without a stream-splitter.

Only the particle-beam interface produces EI spectra for direct comparisons with computerized library spectra of fragmentation patterns. The other systems enable the relative molecular mass (RMM) of analytes up to 10^5 and above to be established. An example of an HPLC-APCI separation and identification of some benzodiazepine tranquillizers is shown in Figure 4.39. The most appropriate choice of LC -MS interface for a particular

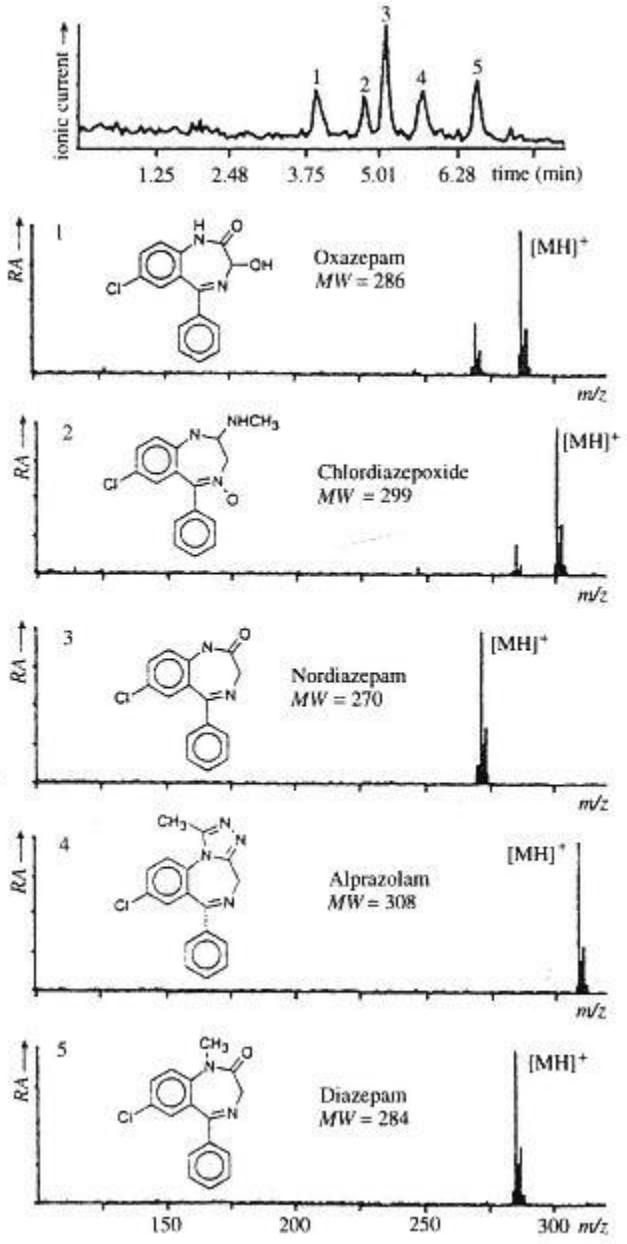

Figure 4.39
HPLC-APCI separation of a mixture of five benzodiazepines using CH_3 CN/CH_3OH/H $_2$O (40/25/35) (wt/vol) as the eluate, with a flow rate of 1.2 ml min^{-1}

application depends on the RMM range and polarities of the compounds in the mixture, as shown in Figure 4.40.

The technology and value of HPLC-mass spectrometry has increased in parallel with developments in mass spectrometry itself. *Tandem mass spectrometry*, MS/MS and $(MS)_n$, systems to study additional fragmentation inside the spectrometer and the possibility of analysing mixtures of analytes where minimal or no HPLC separation is required, are two of the most significant. Very accurate RMM measurements can now be made using a new generation of compact time-of-flight (TOF) spectrometers whose performance is comparable to much larger and more expensive magnetic sector instruments.

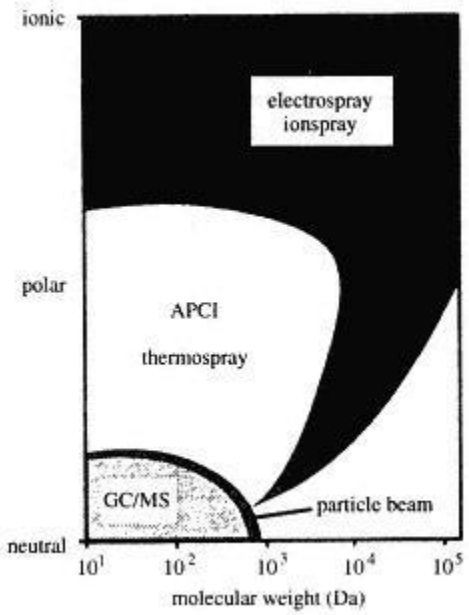

Figure 4.40
Application range of different coupling methods.

Optimizing a Separation

Adequate resolution of the components of a mixture in the shortest possible time is nearly always a principal goal. Establishing the optimum conditions by trial and error is inefficient and relies heavily on the expertise of the analyst. The development of computer-controlled HPLC systems has enabled systematic automated optimization techniques, based on statistical experimental design and mathematical resolution functions, to be exploited. The basic choices of column (stationary phase) and detector are made first followed by an investigation of the mobile phase composition and possibly other parameters. This can be done manually but computer-controlled optimization has the advantage of releasing the analyst for other

duties or running overnight. Gradient elution (p. 91) is sometimes used as a preliminary step for unknown samples to indicate possible *isocratic* (constant mobile phase composition) conditions.

A simple means of optimizing a reverse phase separation is to obtain a series of six chromatograms with binary mixtures of an organic solvent, such as acetonitrile or methanol, and water ranging from 0 to 100% water in steps of 20%. Assessment of each chromatogram, followed if necessary by additional ones with intermediate proportions of the organic solvent and water, then enables the best composition to be selected. An extension of this procedure is to use ternary mixtures of two organic solvents and water. An example of the separation of a six-component mixture using five different proportions of methanol, tetrahydrofuran and water is shown in Figure 4.41.

More sophisticated, computerized and usually automated methods of mobile phase optimization are commercially available. Most software packages are designed to use one of two alternative approaches. In the first, a pre-determined series of chromatograms is recorded followed by evaluation to find the optimum composition. In the second a *directed search* routine is used whereby the computer evaluates each chromatogram in turn according to specified criteria before selecting a new composition for the next run. With the former or 'simultaneous' technique, evaluation of each chromatogram is based on the computation of a single numerical value called a *chromatographic response or optimization function* (CRF or COF). This represents the quality of the chromatogram as a function of the peak overlap (resolution) for each pair of adjacent peaks in the sample and the total elution time. Contour maps are then plotted using the individually computed CRF or COF values, and additional values are derived by interpolation. Directed searches offer greater flexibility and may require a smaller number of chromatograms, but they may select a localized optimum composition rather than a global one. However, they are *adaptive* and have the ability to cope with unexpected outcomes during the optimization process. A problem with both approaches is caused by 'peak crossovers', i.e. changes in elution order. Keeping track of each peak in a chromatogram represents a major challenge for optimization software.

The *simplex lattice design* is a straightforward example of the simultaneous technique and is based on a *solvent selectivity triangle* originally proposed by Snyder and involving the plotting of an *overlapping resolution map* (ORM). Three solvents of differing chromatographic selectivity are mixed with a fourth (solvent strength adjuster) to provide three mobile phases of equal solvent strength (*isoeluotropic*), e.g. methanol, acetonitrile, tetrahydrofuran and water would be suitable for a reverse phase separation. The three mobile phases form the apices of a solvent selectivity triangle. At least four other compositions are made by blending the initial three in various proportions; these lie along the sides or within the triangle. The mixture is then chromatographed using each of the seven (or more)

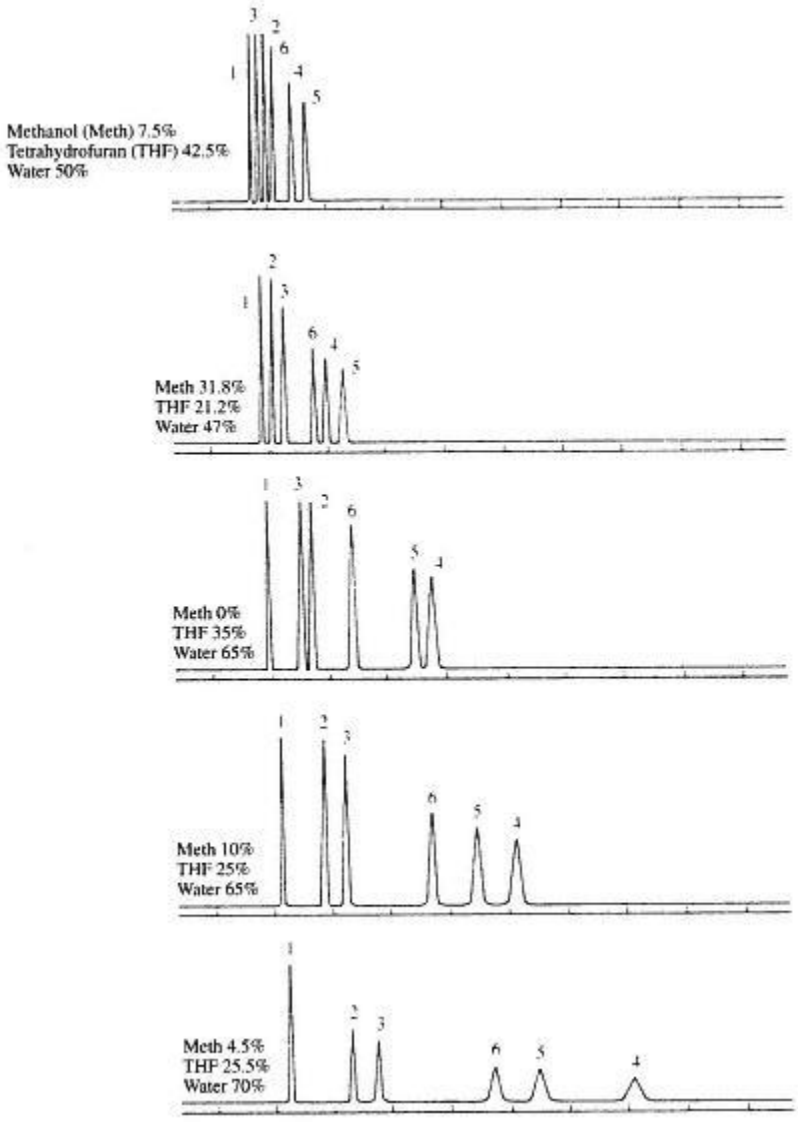

Figure 4.41
Optimizing an HPLC separation using five ternary mobile phases. Peaks: (1) benzyl alcohol, (2) phenol, (3) 3 -phenylpropanol, (4) 2,4-dimethylphenol, (5) benzene, and (6) diethyl *o*-phthalate. (After R.D. Conlon, 'The Perkin-Elmer Solvent Optimization System,' *Instrumentation Research*, p. 95 (March 1985). Courtesy of Instrumentation Research)

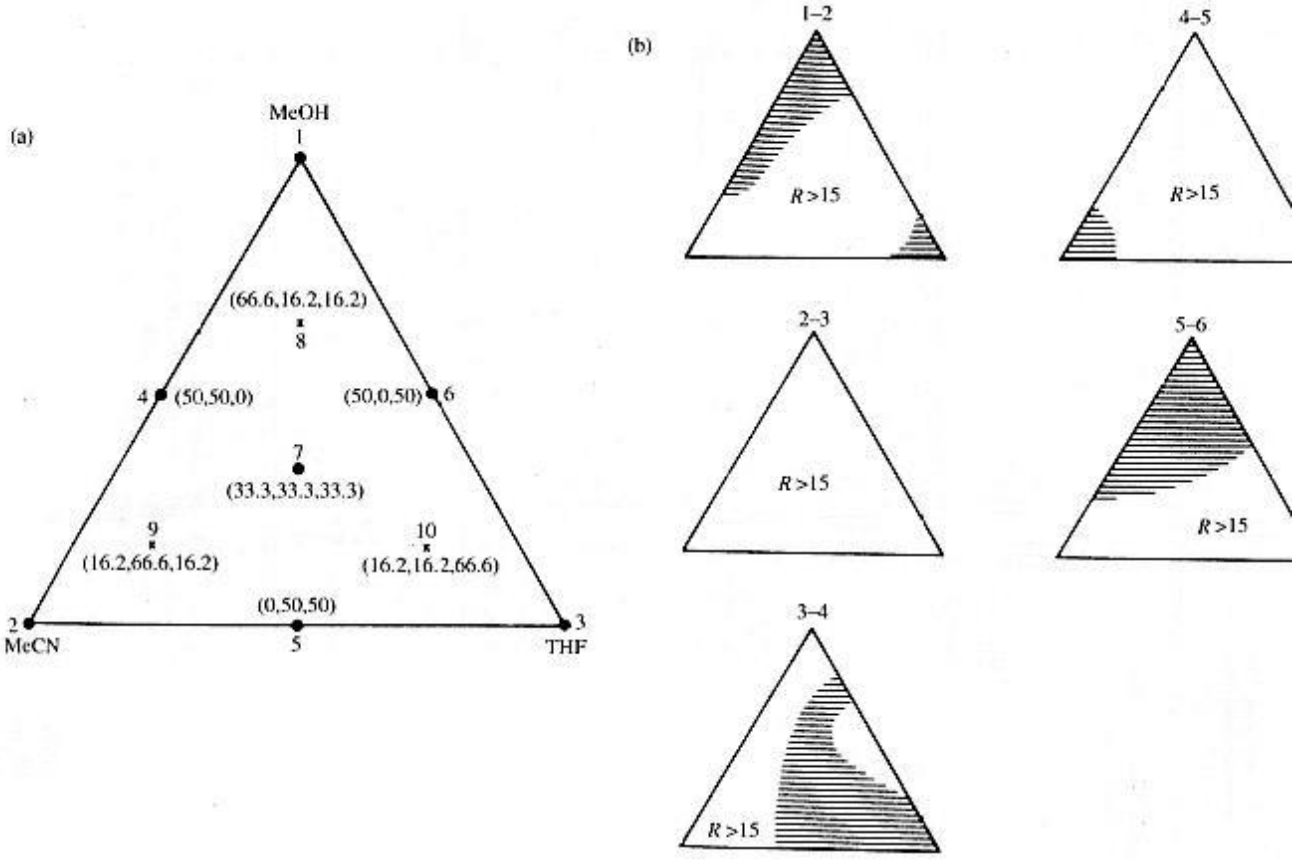
(a)
MeOH
1
(66.6,16.2,16.2)
8
4
(50,50,0)
(50,0,50)
6
7
(33.3,33.3,33.3)
9
(16.2,66.6,16.2)
10
(16.2,16.2,66.6)
(0,50,50)
2
MeCN
5
3
THF
(b)
1–2
R>15
4–5
R>15
2–3
R>15
5–6
R>15
3–4
R>15

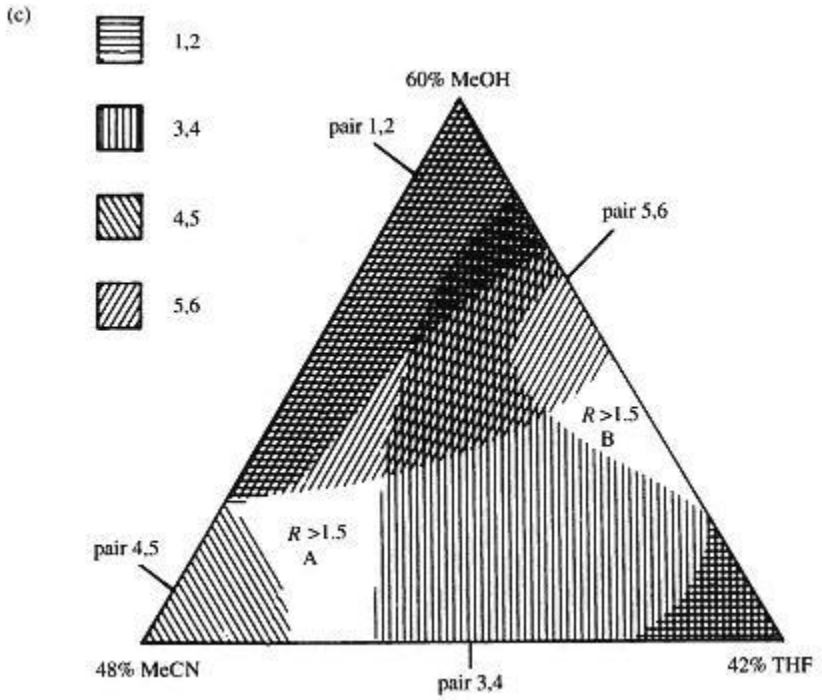

Figure 4.42
(a) Simplex lattice design for reversed-phase chromatographic optimization showing relative proportions of each solvent to be used.
(b) Individual resolution maps for the five pairs of solutes in a 6 - component test mixture.
(c) Overlapping resolution map (ORM) for the 6-component test mixture.

compositions in turn, and a resolution contour map generated from the COF values for each pair of adjacent components in the mixture for all compositions. The superimposition of the individual contour maps produces an ORM which is used to identify the optimum mobile phase composition for separating the mixture with a specified resolution. The provision of a computer system with high-resolution colour graphics greatly enhances the value of this approach. The solvent composition triangle and set of resolution maps for a 6-component mixture are shown in Figure 4.42.

Other more mathematical techniques, which rely on appropriate computer software and are examples of chemometrics (p. 33), include the generation of one-, two- or three-dimensional *window diagrams*, *computer-directed searches* and the use of *expert systems* (p. 529). A discussion of these is beyond the scope of this text.

Applications of High Performance Liquid Chromatography

The use of HPLC in all its forms is growing steadily and may eventually exceed that of GC. This is because all four sorption mechanisms can be exploited and the technique is well suited to a very wide range of compound types including ionic, polymeric and labile materials. The most appropriate choice of mode of HPLC for a given separation problem is based on the relative molecular mass, solubility characteristics and polarity of the compounds to be separated and a guide to this is given in Figure 4.43.

Adsorption chromatography on silica is well suited to the separation of less polar compounds such as polyaromatic hydrocarbons, fats and oils, and for the separation of isomers or compounds with differing functional groups.

Bonded-phase chromatography (BPC) in one form or another is suitable for most HPLC separations ranging from mixtures of weakly polar to highly polar and ionizable compounds. Reverse phase chromatography using octa decyl (ODS or C_{18}) columns and methanol/aqueous buffers or acetonitrile/water mobile phases is by far the most widely used. The mechanism of separation is not clear and may involve adsorption or partition depending on the solutes and particular phases used. For weakly acidic or basic solutes, pH control is very important as retention times vary considerably with degree of dissociation or protonation, the non-ionic form of a solute having a greater affinity for a non-polar stationary phase. Figure 4.44 shows the relation between pH and retention time for five weakly acidic or basic drugs chromatographed on an ODS stationary phase. Ion-pair or paired-ion chromatography (IPC or PIC) on non-polar bonded-phase columns is often used for the separation of ionic or ionizable solutes in place of conventional ion-exchange resins or bonded-phase ion-exchangers. Mobile phases used in IPC are buffered and contain counter-ions of opposite charge to the solute ions, e.g. tetrabutylammonium ions for the separation of ionized carboxylic acids at pH 7 or 8, or alkyl sulphonates for the separation of protonated weak bases at pH 3 or 4. Under the appropriate conditions,

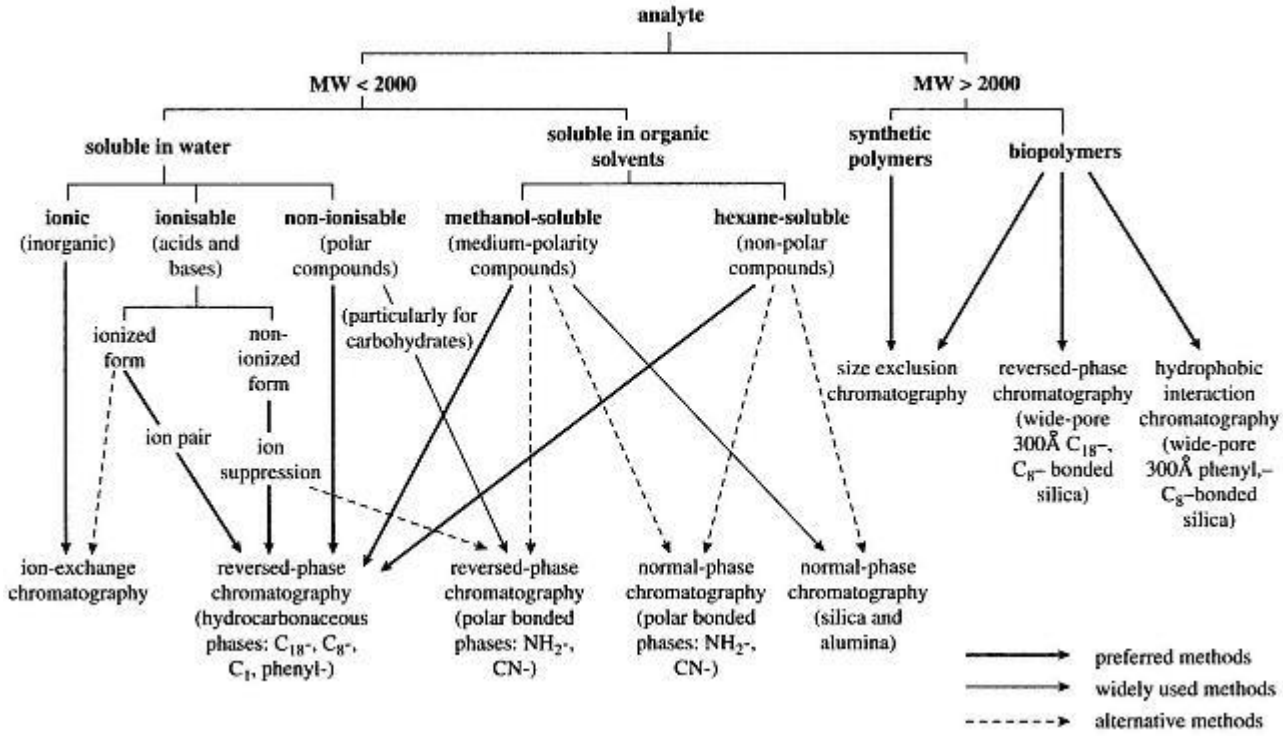

Figure 4.43
Selection of suitable liquid chromatographic methods for anlaysis depending on solute structure and properties.

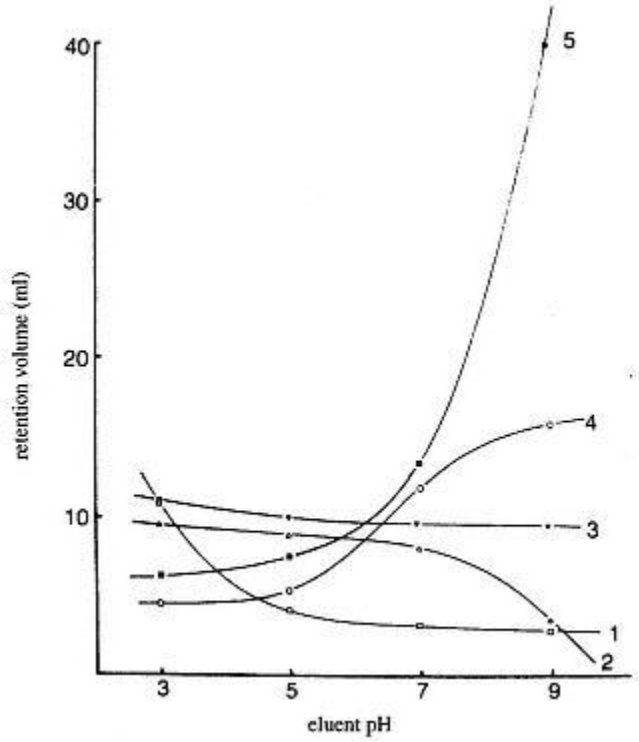

Figure 4.44
Effect of eluent pH on selectivity in reverse -phase BPC.
Column, 30 × 0.4 cm, µ-Bondapak-C_{18} , 10 µm; mobile phase,
0.025 *M* NaH_2PO_4-Na_2HPO_4 with 40% vol methanol;
flowrate, 2 ml/min; temp., ambient; detector, UV, 220 nm;
samples, 1–10 µg. (1) Salicylic acid; (2) phenobarbitone;
(3) phenacetin; (4) nicotine; (5) methylamphetamine.

solute ions form ion-pairs with the counter-ions, which partition into or are adsorbed selectively onto the stationary phase. IPC offers the advantages of greater efficiency and column stability and more selectivity in the separation of ionic or ionizable compounds compared to bonded-phase or conventional ion-exchangers.

Size exclusion (gel filtration or permeation) chromatography (SEC) is suitable for solutes with molecular weights of 2000 or more and is also useful for the preliminary investigation of unknown samples. Separated fractions can then be subjected to one of the other modes of HPLC. Exclusion chromatography is discussed in section 4.3.6.

HPLC has had considerable success in separating compounds as diverse as steroids, carbohydrates, vitamins, dyestuffs, pesticides and polymers. It is used routinely for the assay of pharmaceutical products, the monitoring of drugs and metabolites in body fluids and for other biomedical, biochemical and forensic applications, such as the detection of drugs of abuse. The determination of additives in foodstuffs and beverages including sugars,

vitamins, flavourings and colourings and the quality control of polymers, plastics and resins are further examples of the very wide and growing scope of this technique. Figure 4.47 illustrates a number of separations employing different modes of HPLC.